5-4 ACCELERATORS

BY

G. K. Green

1 INTRODUCTION

1.1 Types of Particle Accelerators

1.11 Particle accelerators are constructed primarily for use in research on nuclear and particle physics. They are also used for isotope production (a major use prior to the development of the reactor) and as X-ray sources for radiography and radiotherapy. Commercial use of intense beams of accelerated particles for sterilization and similar processes is just beginning. Table 1 classifies accelerators and indicates particles accelerated and highest energy built or in process. Sections on each type should be consulted for further qualifications too lengthy to include in a table. Note that beam currents and energies are subject to rapid obsolescence because the accelerator art is evolving rapidly.

High-energy electrons and protons are fundamental in research, and so are the most usual accelerated particles. However, deuterons are often used, α particles less often, and heavier ions in a few machines. In principle, any charged particle can be accelerated, but limitations are imposed by ion sources and by the practical range of charge-to-mass ratio.

Table 1. Types of Particle Accelerators

Classification and type	Particles accelerated	Maximum energy built or in process
Straight-line accelerators:		
Direct-voltage types:		
Cockcroft-Walton*	*epdαh*	4 Mev
Van de Graaff*	*epdαh*	12 Mev
R-F acceleration types:		
Proton linear accelerator†	*ph*	600 Mev *p*
Electron linear accelerator*	*e*	1 Bev
Circular or magnetic accelerators:		
Constant-gradient types:		
Cyclotron†	*pdαh*	25 Mev *pd*
Betatron*	*e*	300 Mev
Microtron	*e*	5–10 Mev
Synchrocyclotron†	*pdαh*	700 Mev *p*
Electron synchrotron†	*e*	300 Mev‡
Proton synchrotron	*p*	10 Bev
Alternating-gradient types:		
Alternating-gradient synchrotron	*ep*	6 Bev *e*, 30 Bev *p*
Fixed-field alternating gradient types	*ep* (other?)	Bev range

Particles: *e*, electron; *p*, proton; *d*, deuteron; α, α particle; *h*, heavier ions.
Maximum energy stated is an approximation (1956).
* Commercially available (but probably not at maximum energy).
† Limited commercial availability, or built on contract.
‡ 1 Bev for electron racetrack.

1.2 Units and Formulas

All accelerators operate by interactions between fields and charged particles. Since very high velocities are involved, it is usually necessary to use the mechanics of special relativity. Units and symbols in this section are defined as follows:

e = charge on the electron or proton, esu. $e = 4.80 \times 10^{-10}$ esu
m_0 = rest mass of particle. Electron mass is 9.10×10^{-28} g; proton mass 1.67×10^{-24} g
m = total mass of particle
c = velocity of light. $c = 3 \times 10^{10}$ cm/sec
E, T, E_0 = total, kinetic, and rest energy of particle respectively, ergs unless stated as Mev
v = velocity of particle, cm/sec
β = v/c
p = momentum
V = electric potential difference, esu or volts if stated
B = magnetic field, gauss
R = radius of curvature, cm unless stated as ft
ω, f = angular velocity, frequency, of revolution
ev = electron volt. Energy gained by unit charge falling through potential difference of 1 volt. 1 ev = 1.6×10^{-12} erg
Mev, Bev = million electron volts, billion (10^9) electron volts

The fundamental mass-energy relationships are

$$E = mc^2 \qquad E_0 = m_0c^2 \qquad \text{ergs, g, cm/sec}$$

giving for the rest mass of the electron and proton

$$m_e = \frac{9.1 \times 10^{-28}(3 \times 10^{10})^2}{1.6 \times 10^{-6}} = 0.51 \text{ Mev} \qquad m_p = 940 \text{ Mev}$$

An easily remembered approximation of rest energy is electron ½ Mev, proton 1 Bev. Mass is related to velocity by

$$m = \frac{m_0}{(1 - \beta^2)^{1/2}}$$

leading to the energy relationships

$$E = \frac{m_0c^2}{(1 - \beta^2)^{1/2}} \qquad T = E - E_0 = m_0c^2[(1 - \beta^2)^{-1/2} - 1]$$

Reducing, energy and velocity are connected by

$$\beta^2 = 1 - \left(\frac{E_0}{E}\right)^2 = 1 - \left(\frac{E_0}{T + E_0}\right)^2$$

This gives the momentum in various forms:

$$p = mv = m_0v(1 - \beta^2)^{-1/2} = m_0\beta c(1 - \beta^2)^{-1/2} = \frac{(E^2 - E_0^2)^{1/2}}{c} = \frac{(T^2 + 2TE_0)^{1/2}}{c}$$

Figure 1 shows velocity vs. kinetic energy in general units.

In an electric field $\boldsymbol{\varepsilon}$ a force is exerted on a particle $\mathbf{F} = e\boldsymbol{\varepsilon}$. If the particle falls through potential difference V, it gains kinetic energy $T = eV$. If V is in volts, e is number of charge units, then T will be given in electron volts.

In a magnetic field the force on a moving particle is orthogonal to both $\mathbf{v}$ and $\mathbf{B}$ and is $\mathbf{F} = (e/c)\mathbf{v} \times \mathbf{B}$. The particle will travel a curved path (p and B orthogonal)

with radius of curvature given by

$$BR = \frac{pc}{e} = \frac{(E^2 - E_0^2)^{1/2}}{e} = \frac{(T^2 + 2TE_0)^{1/2}}{e}$$

At low or "nonrelativistic" energies this converts to $BR = (2TE_0)^{1/2}/e$. The angular velocity of revolution and its direction

$$\omega = -\frac{e}{mc}\mathbf{B}$$

About an axis parallel to **B** the frequency of revolution

$$f = ec\frac{B}{2\pi\,(T + E_0)}$$

For convenience, express kinetic and rest energy in million electron volts; then for singly charged particles

$$BR = \tfrac{1}{3} \times 10^4(T^2 + 2TE_0)^{1/2} \quad \text{gauss-cm}$$
$$= 109(T^2 + 2TE_0)^{1/2} \quad \text{gauss-ft}$$
$$f = \frac{1.43B}{(T + E_0)} \quad \text{mc/sec}$$

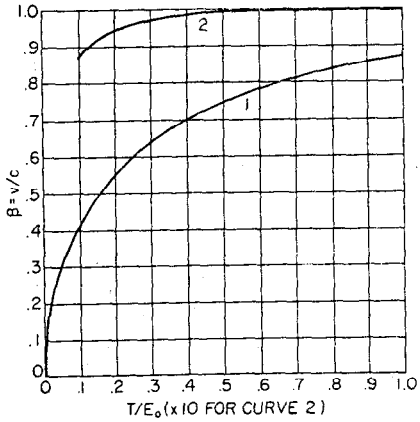

FIG. 1. Ratio of velocity to velocity of light vs. kinetic energy in rest masses.

It should be noted that the energy of a particle is not changed by transit through a magnetic field. If the magnetic field is changing with time, electric fields, which must satisfy Maxwell's equations, are set up. These electric fields will accelerate a particle (see the betatron).

2 STRAIGHT-LINE ACCELERATORS

The straight-line accelerator is one in which the particle traverses the accelerating orbit only once. The usual straight-line orbit could have bends inserted by deflecting fields if there were a good reason. The direct-voltage types apply the full accelerating voltage continuously to a long vacuum tube and are thus limited in energy by voltage breakdown. The energy obtainable can be increased by applying many successive accelerations along the orbit with r-f fields, the method of the linear accelerator.

2.1 Direct-voltage Accelerators

The Cockcroft-Walton and the Van de Graaff have a common element—the high-voltage accelerating tube.[3–9] The only basic difference between the two is the method of generating the high voltage, a transformer-multiplier or cascade generator in the former, and an electrostatic generator in the latter. (The common X-ray machine is a true accelerator in this class but will not be treated in this article.)

2.11 The Cockcroft-Walton was the original accelerator used for nuclear research.[4] As outlined in Fig. 2, a transformer supplies a rectifier-capacitor multiplier to provide the required d-c potentials. The multiplier circuit, shown connected for positive polarity, is evidently extendable to as many stages as are required and as can be properly insulated. The rectifiers can be vacuum diodes, but these are being supplanted by stacks of dry-disk rectifiers.[6]

2.12 The Van de Graaff machine, Fig. 3, has a fast-moving belt of insulating material which is sprayed with charge at the ground end and carries the charge to the high-voltage terminal. The terminal rises in potential until the belt charge current equals the beam current plus leakage. Most of the leakage is down corona points on the corona rings, equalizing the potential gradient. Variation of the corona current to points facing the terminal provides fine control of voltage.[8]

Both types can be built in air up to 1 to 2 Mev, but higher energies require pressurization in a controlled atmosphere. Pressurization is usually done with dry nitrogen plus carbon dioxide in a heavy steel tank at 100 to 300 psi. Either vertical or horizontal construction can be used, the arrangements of Figs. 2 and 3 being arbitrarily chosen from the numerous possible combinations.

The accelerating tube can be a simple structure of glass cylinders containing an axial array of cylindrical electrodes for moderate voltages. At high voltages the

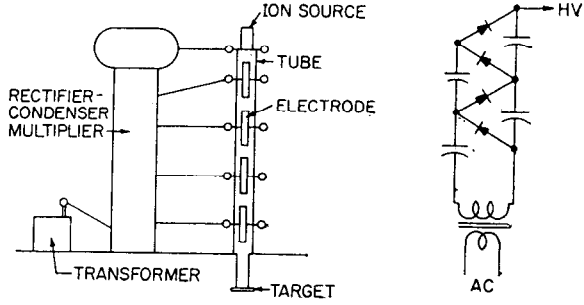

FIG. 2. Simplified Cockcroft-Walton accelerator and cascade multiplier circuit.

tube takes the form of Fig. 3. Insulating rings, usually ceramic, are sealed to electrodes which can be disks with holes or more complex spun forms. Great care is exercised to obtain a nearly uniform potential distribution. All parts must be skillfully designed, and a very clean vacuum system must be employed to avoid severe limitations by secondary currents in the tube and voltage breakdown. Electrons can be introduced into the tube from a hot filament, or positive ions from an ion source,[45,47] and accelerated down the tube. When the particles reach the end of the tube, they possess kinetic energy in electron volts equal to the product of their specific

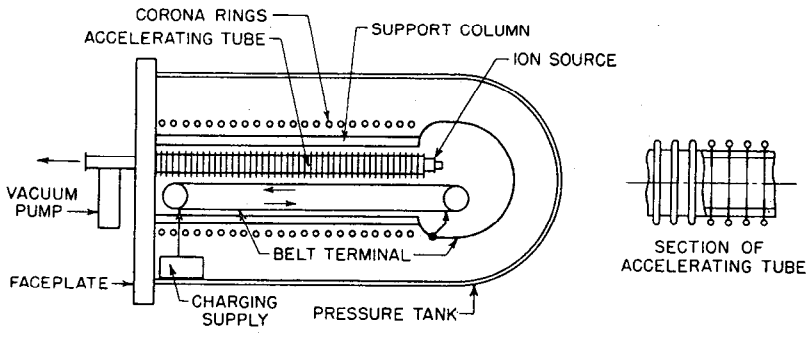

FIG. 3. Pressurized Van de Graaff machine.

charge and the applied voltage. The tube electrodes, at successively higher potentials, are weak electrostatic lenses and focus the particles, that is, apply lateral forces which direct the particles toward the axis of the tube.[5]

Cockcroft-Walton accelerators are being built up to about 4 Mev.[6] Models at a few hundred kev, with beam currents of milliamperes, are used extensively for neutron production by the D-D or D-T reaction.[7] Any ion can be accelerated, but the energy per nucleon is small for heavy ions. When accelerating electrons this type is often called a "constant-potential X-ray set." The energy is readily adjustable, and beam current is limited only by ion source capability and tube breakdown induced by secondary effects of high beam intensities.

The Van de Graaff has attained some 10 Mev at MIT, and many 4- to 5-Mev machines have been built. Compact, pressurized, 1- to 2-Mev models are convenient

for either electrons (X rays) or positive ions. The Van de Graaff is useful for producing a beam of monoenergetic particles, whose energy can be controlled and stabilized to close limits. Currents of the order of 50 μa direct or a few milliamperes in short pulses are normal. An analyzer is generally used with ions because a considerable fraction of the beam consists of molecular ions which must be swept out for most research.

2.2 The Linear Accelerator[10–13]

The early linear accelerator of Sloan and Lawrence[13] operated by launching particles into a row of cylinders of successively greater axial length, alternately connected to an r-f line (Fig. 4). Thus, if the particles spent one half cycle in each "drift tube" they would be accelerated by the field across each gap, since the potential would

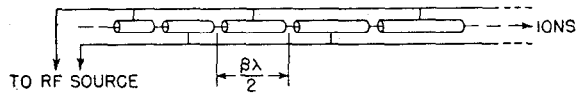

FIG. 4. Early version of linear accelerator.

reverse while the particle was shielded inside the drift tube. If λ is the free-space wavelength of the radio frequency then the length of each drift tube must be $\beta\lambda/2$. The tube length must be cut for the increase in β, and this, in turn, requires that the injection energy and r-f voltage be known for the design. This type was used to accelerate heavy ions, and various modifications are possible for low energies. However, the simple form has unstable particle orbits, and refinements are necessary for long machines and high energy.

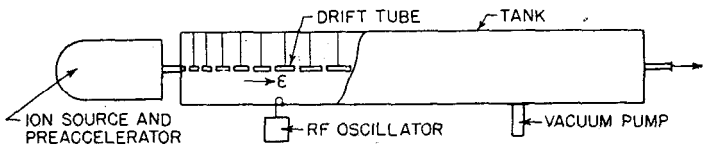

FIG. 5. Sketch of proton linear accelerator.

2.21 A proton linear accelerator is diagrammed in Fig. 5[10]. The copper-lined tank is excited with radio frequency in the axial electric mode. Drift tubes along the axis shield the protons from the electric field while it is reversed and cause the particles to be accelerated only at the gaps. Since the drift tubes are in phase, the gap spacings are $\beta\lambda$. In order to eliminate the impractically short gap spacings required for small energy (low value of β) at the entrance end, the protons are preaccelerated by a Cockcroft-Walton or Van de Graaff and injected into the linear accelerator at a few hundred kev to a few Mev. The injector energy determines the first gap spacing; then the energy gain per gap, which fixes the increase of β, determines the successive gap spacings. The energy gain per gap is a function of the voltage gradient down the tank-drift-tube structure, which, in turn, is very sensitive to small mechanical distortions and to minute variations in frequency. A proton *linac* for, say, 30 Mev would have about 50 drift tubes, while a higher energy machine might easily run over 200. Keeping a structure in the exact adjustment necessary to preserve the phase of the protons down a long row of gaps is impractical. There is an important region of *phase stability*[10] which will automatically compensate for small errors. Consider the wave of Fig. 6 to be the time-varying r-f voltage on an accelerating gap.

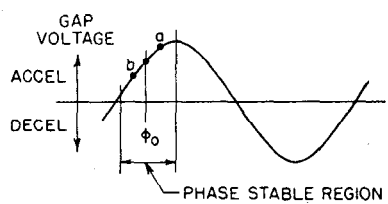

FIG. 6. Phase-stable region of the linear accelerator.

The stable phase angle ϕ_0 defines the correct voltage to match the geometrical design. If a proton arrives late at the gap, as at a, it will receive an excess of energy, its velocity will increase, and it will arrive a little earlier at the next gap. After a number of gaps are crossed, the proton will have returned to the proper phase ϕ_0 but its momentum will be too high, owing to the "catching up" process, and so it will cross the next gap early. The energy gain is then too small, the velocity begins to diminish, and at point b the advance in phase will cease and the too low velocity will begin to make the proton cross the gaps at later phase position—working back toward a. In this fashion a phase displaced proton oscillates in phase about the stable phase angle, provided the peak r-f voltage is greater than that necessary to match the change of $\beta\lambda$ built into the drift tube lengths. Errors in amplitude of the radio frequency are also compensated. The protons are phase unstable on the falling side of the r-f wave. The frequency of phase oscillations is dependent on geometry and voltage distribution and has been calculated for a few specific designs. In a proton linac of, say, 50 Mev the phase oscillation will span a few gaps at the start and a few tens of gaps at the end.

In a long machine the radial stability is also important. For cylindrical drift tubes, the field pattern (Fig. 7a) indicates that a proton off axis is exposed to a radial force toward the axis as it enters the gap and away as it leaves. If the voltage is increasing with time, to ensure phase stability, the radial defocusing force predominates and the proton beam will blow up radially. Simultaneous phase and radial stability can be achieved only by operating near the peak of the r-f wave, a very critical and unsatisfactory condition. The difficulty is fundamental and can be solved only by application of focusing lenses or a means of introducing charge into the beam area. The latter method is applied with grids across an end of the drift tube (Fig. 7b). The radial forces are now always directed inward so the proton will oscillate radially about the axis. The grids can be reduced to a few very thin slats so that they intercept little of the beam, but in a linac of many gaps the intensity reduction by absorption and scattering in the grids is serious. The strong radial defocusing forces can be overcome by lenses inside the drift tube, concealed from the main r-f fields. Solenoids or "strong-focusing" quadrupoles give practical radial focusing for proton linacs of any desired length, with phase stability and good beam intensity.

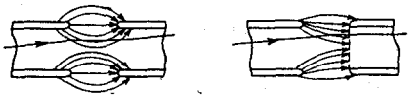

FIG. 7. Electric field shape in linac gap. (a) Without grid, (b) with grid.

Large quantities of r-f power are needed for a linear accelerator. Proton machines favor the 200-Mc region where special triodes, resnatrons, and klystrons are usable with some difficulty. The attainable voltage V of a linear accelerator, length l, r-f power P, and free-space r-f wavelength λ is

$$V = \frac{KP^{1/2}l^{1/2}}{\lambda^{1/4}}$$

K is a geometrical constant.[12] The Berkeley proton linear accelerator has constants quoted as about $V = 30$ Mev, $P = 2$ Mw (pulsed), $\lambda = 1.5$ m, $l = 12$ m. This gives K at about 7. Numerous r-f structures other than the one illustrated can be used, and various efficiencies are attainable, but K will not vary markedly, and power in megawatts is required for energies much in excess of 15 Mev.

Proton linacs produce a beam which emerges directly from the machine with small size, energy spread, and angular divergence. "Conventional" types give average beam currents of microamperes, which should increase, with improved focusing, to milliamperes. Energy output is limited only by availability of powerful r-f generators and cost considerations. Machines with large drift tube aperture, strong magnetic focusing, and very high r-f power can be built to produce output currents of the order of an ampere.[11]

A useful modification of the proton linac principles gives the *heavy-particle linear*

accelerator. Multiple ionized atoms of such elements as C, N, O have readily usable e/m values, and "strippers" can be inserted along the machine axis. These strippers are thin foils or transverse gas jets which remove electrons so as to change the e/m to conform with following machine geometry. Designs can be evolved which will accelerate a considerable variety of "heavy" ions—useful in the study of nuclear structure and of nuclear chemistry.

2.22 Electron Linear Accelerator.[10] The electron linear accelerator has one advantage denied the proton linac. Electrons are highly relativistic at moderate energies; that is, their velocity is almost constant—reaching 0.99c at about 2.5 Mev. With constant velocity there is no phase stability, but neither is there disturbance of the velocity by structural and voltage errors, so precise control of frequency and geometry enable long electron machines to operate without phase stability. Since β is nearly 1, even a few gaps after injection, a loaded waveguide can be designed with phase velocity equal to the electron velocity. A simple and useful loaded guide is shown in Fig. 8*a*, a cylinder loaded with spaced washers or irises and a favorable

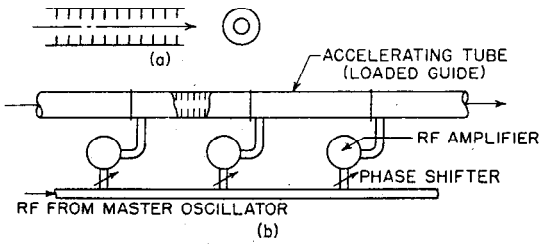

FIG. 8. (*a*) Loaded waveguide. (*b*) Sketch of electron linear accelerator.

structure for the very precise control of dimensions necessary in the absence of phase stability. An electron linac consists of sections of accelerating guide, each supplied radio frequency by a powerful amplifier (capacity of numerous megawatts), the amplifiers in turn excited by a master oscillator through phase shift adjustments for synchronizing the sections (Fig. 8*b*). A wavelength of 10 cm (3,000 Mc) is commonly used. The electron linac at Stanford University is 220 ft long, utilizes 10- to 20-Mw klystrons and should eventually give about 1 Bev. The radial stability problem is relieved by extreme relativistic operation. At β nearly 1 the magnetic fields of the r-f wave compensate the radial defocusing component of the electric fields and an essentially neutral radial equilibrium results.

Electron linear accelerators have emergent beam characteristics similar to those described for proton linacs. However, owing to lack of phase focusing, the electron type has greater energy spread in its emergent beam. Electron linacs of 10 to 20 Mev are useful as X-ray sources and for concentrated external beams. High energies, for research, are limited only by r-f generators and cost.

3 MAGNETIC ACCELERATORS

The curved path of a charged particle in a magnetic field makes it possible to send the particle around repeatedly and to accelerate it with an electric field applied many times in succession. It is then possible to attain high energies with moderate voltages. It is necessary to provide focusing, or restoring, forces which will confine the particles to the accelerating vacuum tube or chamber and to synchronize the accelerating electric field with the recurrence of the particle orbits.[14,20]

Launch a particle in the r,θ plane of Fig. 9, and apply a magnetic field which is perpendicular to this plane at $z = 0$. Let the field have the form $B_z = B_0(r_0/r)^n$, from which the field index can be defined

$$n = -\frac{r}{B_z}\frac{dB_z}{dr}$$

If the particle has velocity perpendicular to r and momentum $p = eBR/c$, it will move in a circle of radius R unless disturbed by electric fields or collisions with gas molecules. The equations of motion are given by the force equations, setting rate of change of momentum equal to the unbalance of centripetal and magnetic force for the radial relation, and equal to the magnetic force for the vertical one:

$$\frac{d}{dt}\left(m\frac{dr}{dt}\right) = \frac{mv^2}{r} - \frac{e}{c}vB_z$$

$$\frac{d}{dt}\left(m\frac{dz}{dt}\right) = \frac{e}{c}vB_r$$

If radial and vertical excursions are small, we can replace r by $R + x$ and restrict z to small values. On the equilibrium orbit the angular velocity $\omega_0 = v/R$, $mv = RB_0e/c$; and $B_z = B_0[R/(R + x)]^n$. In a two-dimensional magnetic field

$$\frac{\partial B_r}{\partial z} - \frac{\partial B_z}{\partial r} = 0$$

and this relation is approximately true for a cylindrical field with small gradients.

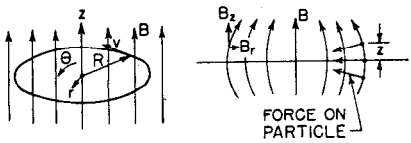

FIG. 9. Coordinate system and general magnetic field shape for constant-gradient magnetic accelerators.

Using the relationship $B_z = B_0(R/r)^n$ and integrating, $B_r = -nzB_z/r \simeq -nzB_z/R$. Substituting, the reduced equations of motion become

$$\frac{d^2x}{dt^2} + \omega_0^2(1 - n)x = 0$$

$$\frac{d^2z}{dt^2} + \omega_0^2 nz = 0$$

These are the equations of a simple harmonic oscillator, showing that a particle disturbed from the equilibrium orbit will execute free, or "betatron," oscillations about that orbit with angular velocity related to angular velocity of revolution by

$$\omega_r = (1 - n)^{1/2}\omega_0 \qquad \omega_z = (n)^{1/2}\omega_0$$

For the oscillations to be stable the roots must be real and the first equation requires that $n < 1$; physically this means that with increasing radius the magnetic force must fall off more slowly than the centripetal force. In the vertical direction stability requires $n > 0$, which corresponds to the line of force curvature shown in Fig. 9. If the magnetic field increases with radius, a vertically displaced particle will be forced away from the median plane and lost.

3.1 Constant Gradient Magnetic Accelerators

These have their magnetic field and its gradient constant at any constant radius. Stability of particle motion requires $0 < n < 1$ as a condition of magnetic field shaping.[20] The radial and vertical restoring forces on the particles are not very strong, so a relatively large aperture for acceleration is necessary. Figure 10 shows the BR product as a function of energy for electrons and protons.

3.11 The cyclotron[14–18] was the first of the family of magnetic accelerators. A large electromagnet produces a cylindrical region of magnetic field, at the center of

which is an ion source.[46] The ions encounter an r-f electric field between the dees and are accelerated synchronously if the angular velocity of the radio frequency equals the angular velocity of the particles, eB/mc. At "low" energies the mass m does not increase appreciably, so ω is almost independent of velocity and radius—the important "cyclotron condition." However, the field must diminish with increasing radius to provide the restoring forces necessary to keep the ions from striking the dees. Sufficient focusing is obtained with a very small radial gradient, and the particles spiral out (Fig. 11) as their energy increases, with only a small drop in rotation frequency. There is no phase stability, so the number of revolutions must be kept small to limit the cumulative phase error and continue the synchronous acceleration to the edge of the dee where the orbit can clear a thin separator, forming one side of the deflector channel. High voltage on the deflector produces a radial electric field which extracts the beam from the dee space for external use.

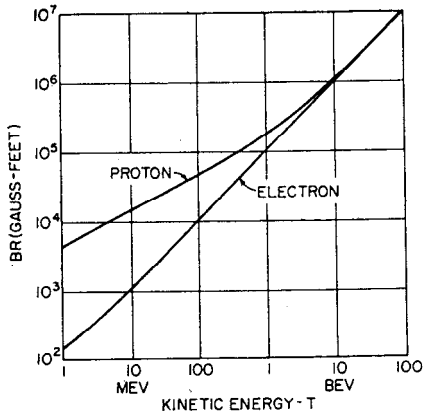

FIG. 10. Field-radius product for electron and proton in a magnetic field.

Protons, deuterons, or α particles are usually accelerated. For special purposes highly ionized heavy ions (such as C^{4+}) can be produced in ion sources and accelerated.[17] Energy limits for the conventional cyclotron depend on the attainable r-f dee voltage, since phase errors accumulate from mass increase as well as from radial field decrease.[14,43] A crude approximation of the energy limit in million electron volts for deuterons is $T_{max} = 2V^{1/2}$, where V is the dee voltage in kilovolts. Cyclotrons produce internal circulating beams of many milliamperes with 0.1 to 1 ma available externally. Sizes range to about 65-in.-diameter poles, producing 25-Mev deuterons at high working fields ($\sim$19,000 gauss), while larger diameters have been used with long gaps at lower fields to obtain high beam currents. The radio frequency is 1.52×10^{-3}B mc/sec for protons and about half that for deuterons. The cyclotron is not useful for electrons because the frequency changes rapidly with energy at constant B.

3.12 The betatron was the first magnetic electron accelerator.[19–22] It is the only such type that does not use r-f acceleration. Where the cyclotron accelerates particles at increasing radii in a field constant in time, the betatron uses an orbit of constant radius in a magnetic field rapidly increasing with time. If the orbit radius remains constant, the momentum must be increased by acceleration as the field increases, since $p = eBR/c$. If the orbit is threaded by magnetic flux Φ there is an electric field ϵ along the orbit given by $2\pi R\epsilon = d\Phi/dt$. This produces a force on the electron $F = dp/dt = e\epsilon/c = (e/2\pi Rc)\, d\Phi/dt$. Integrate and set equal to the radius condition

$$p = \frac{e(\Phi - \Phi_0)}{2\pi Rc} = \frac{eBR}{c}$$

so that

$$\Phi - \Phi_0 = 2\pi R^2 B$$

This is the "betatron condition" necessary for a stable equilibrium orbit. It requires that the flux change through the orbit be twice what it would be if the field were uniform. The betatron (Fig. 11) has a vacuum doughnut which surrounds the magnet core. The core is laminated, to diminish losses and eddy-current field distortions, and is excited with alternating current in the coils. During the a-c cycle when the field rises above zero, a stream of electrons is emitted from the gun with energy of kilovolts or tens of kilovolts, timed such that the injection energy matches the orbit

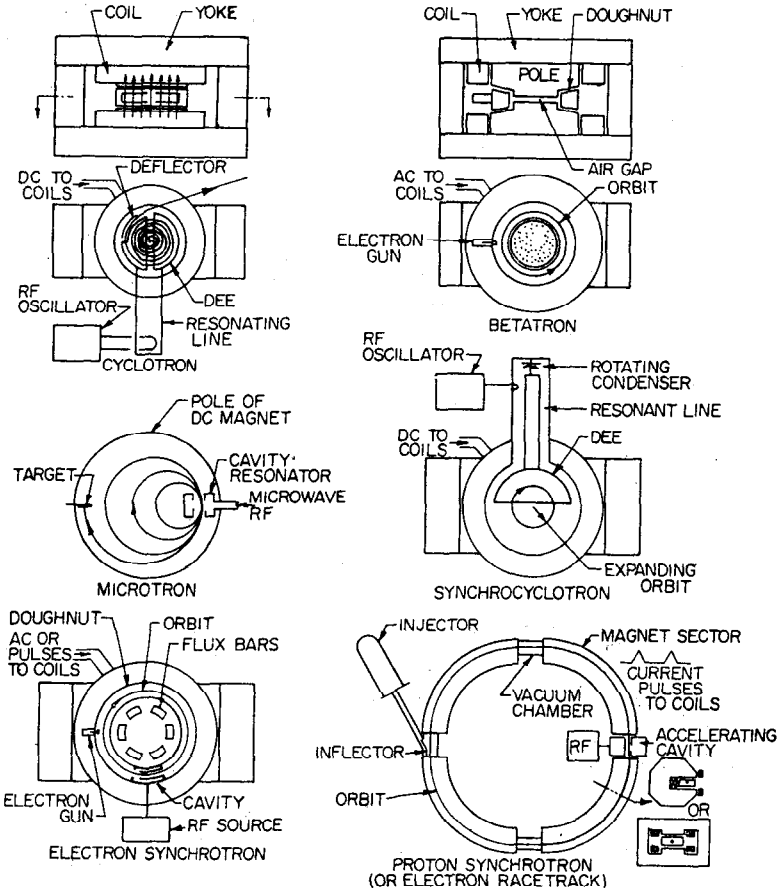

FIG. 11. Diagrams of the constant-gradient (low-n) magnetic accelerators.

field. The electrons are then accelerated by the flux change (which must be in the same direction as the guide field), and the betatron stability condition is maintained by adjusting the air gap for the necessary ratio of flux to field. When the peak of the a-c cycle is reached, the electrons are forced into a target by deliberate mistracking of the flux. This is done by letting the core saturate or by pulsing auxiliary coils.

The electric field is continuously applied, so there is no problem of synchronization as in the cyclotron. However, the electrons travel hundreds of kilometers while being accelerated, and a good vacuum is necessary to avoid serious losses from gas scattering. In the simple form of Fig. 11 the maximum orbital field is limited by the flux requirement to a value well less than half the saturation induction of the iron. Since the required condition applies to change of flux, the constant of integration Φ_0

can be chosen negative and a betatron flux core back-biased with direct current to obtain about twice the energy from a given radius and magnet weight. The long path requires a high degree of orbital stability that would be difficult to achieve with the low-n value used in cyclotrons. In the betatron n is set within the region ¼ to ¾ and the "betatron oscillations" are a little slower than the revolution frequency. A more refined treatment of the equations of motion for varying magnetic field shows that amplitude of the oscillations (set up by injection errors, gas scattering, and magnet inaccuracies) decreases as the field rises, being proportional to $B^{-1/2}$.

The betatron is used mostly as a source of high-energy X rays, although external beams of electrons have been obtained.[19] Machines in the 20-Mev range are common (commercially available), and one has been built for 340 Mev at the University of Illinois. X-ray output ranges from tens to thousands of roentgens per minute at a meter from the target.

In common with all circular electron accelerators, the betatron is plagued by radiation loss from the electrons at high energies.[21] The electrons lose in radiation

$$\text{Kev/turn} = \frac{88E^4}{R}$$

with E in billion electron volts and R in meters. A 300-Mev betatron, radius 1 m, is subject to radiation loss of 0.7 kev per revolution, which is large enough to require correction of the flux condition. Parenthetically, the betatron method is not, in principle, confined to acceleration of electrons.

3.13 The microtron was made possible by the development of high-power microwave techniques. A constant, essentially uniform magnetic field in the vacuum chamber bends electron paths into circles. A microwave resonator is placed near one edge of the field and excited with many kilowatts by a magnetron or other r-f source, operating at, perhaps, 3,000 mc/sec.[24] The most obvious operating mode is given by a resonator pulsed to a peak r-f voltage of 510 kv (Fig. 11). Electrons will be produced by field emission, and some will emerge from the resonator with 510 kev of kinetic energy so that their masses will be $2M_0$. The period of revolution is

$$t = \frac{2\pi mc}{eB}$$

and the value of B can be adjusted to make t equal 2 cycles of the radio frequency. On the next passage, the electrons will gain another rest mass and t will equal 3 cycles of the radio frequency, and so on, until the final orbit strikes a target or enters an ejection channel (magnetic shield). Other modes of operation can be used.[23] There is a region of phase stability for the microtron, but radial and vertical orbital stability are approximately neutral. The small number of revolutions for acceleration makes it possible to operate the microtron with careful adjustment in lieu of vertical and radial restoring forces. The microtron has not been used extensively as an X-ray source but has been proposed as an injector for high-energy electron synchrotrons, since the wide spacing of the orbits facilitates beam extraction.

3.14 Phase Stability. The synchrocyclotron and the various forms of synchrotron attain very high energy by accelerating particles with a relatively small r-f voltage each revolution for an enormous number of revolutions. Vertical and radial restoring forces are maintained by using a field with $0 < n < 1$. The resulting free, or betatron, oscillations can be contained in an aperture of practical size for path lengths which exceed 10^5 miles in some machines. This orbital stability solves the guidance problem, but there must be a mechanism for keeping the radio frequency and the particle in phase to high precision.[26] In Fig. 12 a particle is shown traveling an orbit in a cylindrically symmetrical field of indicated radial falloff and accelerated by the gap field of an r-f cavity. If the particle velocity is v and the orbit length is l, the time of a revolution is $t = l/v$ and, differentiating,

$$\frac{\Delta t}{t} = \frac{\Delta l}{l} - \frac{\Delta v}{v}$$

Substituting the field relation and the relations of the first section,

$$\frac{\Delta t}{t} = \left(\frac{1}{1-n} - \frac{E_0^2}{E^2}\right)\frac{dp}{p}$$

Since n lies between 0 and 1, the first term of the parenthesis is greater than 1, while the second is less than 1, so the parenthesis is positive. Therefore an increase in momentum will cause an increased transit time. Although the velocity of the particle increases, it moves on a larger radius and the increase in path length is proportionately greater. If the particle must cross the gap at phase ϕ_0 (Fig. 12) to obtain the required energy gain per turn, assume that it arrives at a and obtains excess momentum. The transit time will lengthen as it travels on a larger radius, and it will cross the gap at b, obtaining less energy the next transit, etc. Oscillation of the

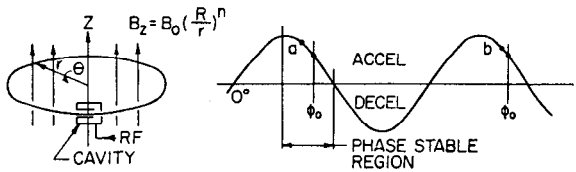

FIG. 12. Coordinate system and phase-stable region of constant-gradient magnetic accelerator.

phase about ϕ_0 will occur at a frequency much slower (two to three orders of magnitude) than the revolution frequency. Note that this phase stability is found on the decreasing slope of the r-f voltage wave whereas the linac stability is on the increasing slope.

3.15 The synchrocyclotron or f-m cyclotron uses a solid pole magnet with poles shaped to give a radially decreasing field for focusing forces.[25–29] The radio frequency is varied by a rotating condenser (or tuning-fork capacitor). One dee is used for convenience in r-f design. Particles emitted by the ion source will be accelerated twice each revolution by the r-f field of the dee. Suppose the frequency fixed, then as a particle spirals out and gains momentum, its mass will increase and its increasing radius carries it into smaller magnetic field. The frequency of revolution $f = eB/2\pi mc$ will diminish, the particle will arrive later in r-f phase each revolution (Fig. 12) and will eventually reach the phase where the r-f voltage is zero as it crosses the dee gap. Further retardation in phase will decelerate the particle, making it spiral back to smaller radius, so it will oscillate in phase about a $\phi_0 = 180°$. The radius is

$$R^2 = \left(\frac{c}{2\pi f}\right)^2 - \left(\frac{m_0c^2}{eB}\right)^2$$

Now suppose the frequency to be lowered slightly; the r-f phase will retard with respect to the particle phase so the particle will cross the gap at $\phi < 180°$ and will spiral out to a larger radius and higher energy. In the synchrocyclotron the frequency is lowered continuously each cycle of the rotating condenser and a bunch of particles is accelerated from center to rim each cycle. The variation of frequency with time is not critical, but the maximum rate is set by the dee voltage; that is, the variation must not be so rapid that the energy gain per turn exceeds the peak r-f dee voltage.

The f-m cyclotron can be designed for energies involving large mass increase with reasonable dee voltages (the order of 50 kv). The University of California 184-in. machine has a magnet weighing over 4,000 tons. It will deliver 700-Mev protons with a frequency ranging from 35 to 19 Mc. The energy is limited only by economics of the huge magnet and difficulties of r-f design. Beam is not emitted continuously, as in the conventional cyclotron, but in bursts at the rate of the modulating condenser. Time average currents are about a microampere. The change in radius per turn at high energies is too small to use the splitter-deflector. A few per cent of the beam can be extracted by perturbing the magnetic field near the rim,[27] but the beam is normally

collected on an internal target, just inside the $n = 0.2$ radius. Since the magnetic field falls off rapidly at the edge of the pole, the rapid increase in gradient is then accompanied by a rapid increase in field index n. If $n = 0.2$, the radial betatron oscillations are twice the frequency of the vertical ones, and at $n = \frac{1}{4}$ the vertical oscillation frequency is half revolution frequency. Irregularities in the magnetic field will couple the oscillations at $n = 0.2$ and excite the vertical ones at $n = \frac{1}{4}$. Unless the field is precisely uniform as a function of angle θ, these "resonances" will blow up the oscillations and lose the beam.[28] Resonances at $n = 1$ and 0 are especially bad, since vertical and radial frequencies, respectively, are equal to revolution frequency and small irregularities will destroy the beam in a few turns.

3.16 The electron synchrotron takes the general form of Fig. 11, although considerable variation in design has been used.[30–33] Acceleration is at "constant" radius in a rising magnetic field. Electrons injected from the gun at tens of kilovolts are given betatron acceleration to a couple of million electron volts. The small flux bars begin to saturate, and, if the process continued, the electrons would spiral into the inner wall of the doughnut. However, r-f accelerating voltage is then applied each turn by the high-Q cavity at constant frequency, and the electrons continue to accelerate as the magnetic field rises. The phase stability keeps the electrons in synchronism with the radio frequency, and as the electron velocity increases, the orbit radius increases to match. Since the velocity at r-f turn-on is only about 1 per cent less than c, the resulting 1 per cent change in radius is easily accommodated in the doughnut. It is necessary that the peak r-f voltage exceed the energy gain per turn (in electron volts) required to keep the radius constant in the rising magnet field. Energy gain per turn, in electron volts, with R in feet, is

$$\Delta E = 5.85 \times 10^{-5} R^2 \frac{dB}{dt}$$

Radiation loss must be supplied in addition. The guide field is shaped as in the betatron for orbital stability.

The electron synchrotron needs only a ring of guide field and does not require the massive solid pole magnet of the cyclotron or flux core of the betatron. Used mostly for research on γ rays, this design is built up to energies of some 300 Mev. Above this energy the form is modified to that of the next section. Smaller versions for 50 to 100 Mev are quite compact and are useful X-ray generators. This type of electron synchrotron also lends itself to construction with air-core coils, that is, conductors shaped to produce proper magnetic fields without iron cores.

Another type of electron synchrotron is the *Racetrack* with "straight sections" left between magnet sectors. Its operation is identical with that of the proton synchrotron next described, but the r-f change is much less. Energy is limited only by the excessive radiation loss in the billion-electron-volt region. The California Institute of Technology synchrotron will produce electrons over 1 Bev.

3.17 Proton synchrotrons are practical means for accelerating protons to billion electron volts.[34–38] These complex and massive machines are the largest of the accelerators. They are used for research in particle physics, which requires very high energies. The proton synchrotron involves a composite of principles developed in the previous sections. Referring to Fig. 11, the magnet is in ring form with straight sections left for insertion of equipment and the protons are accelerated at approximately constant radius. The magnet is excited with a triangular current pulse. During the current rise a bunch of protons is injected from a "straight-line accelerator" when the injector energy matches radius and field. The injected beam is electrostatically deflected so it is launched tangent to a stable orbit. Radio-frequency voltage is applied to an accelerating cavity and increases the proton energy as the magnetic field rises. At a desired energy the beam is shrunk into a target, or a large fraction of it can be ejected. Stability is maintained by using a field index n about 0.6. With N straight sections of length L the betatron oscillation frequencies are increased in the ratio $(1 + NL/4\pi R)$.[35] Injection is at a few Mev and a β of the order of 0.1. At a few Bev β is almost 1, and, since the radius is fixed, the radio

frequency must vary some factor of 10, tracking the rising magnetic field. Phase stability maintains the proper stable phase angle provided the radio frequency is free from transients and noise. However, the frequency must match the magnetic field accurately or radial errors and particle loss will ensue. This is a difficult engineering problem.[34] The phase oscillations, when V is the peak r-f gap voltage and ϕ_0 is the stable phase angle, have frequency

$$\Omega = \frac{c}{R + NL/2\pi}\left\{-\frac{eV\cos\phi_0}{2\pi E}\left[\frac{1}{(1-n)(1+NL/2\pi R)} - \frac{E_0^2}{E^2}\right]\right\}^{1/2}$$

which is of the order of 10^{-3} revolution frequency.[35] Three machines,[36] at Birmingham University (England), Brookhaven National Laboratory, and the University of California, have radii of 12, 30, and 50 ft and produce energies of 1, 3, and 6 Bev, respectively. One at 10 Bev has been undertaken in Russia. The beam is accelerated for 1 to 2 sec and contains about 10^{10} protons. The over-all average intensity is low because the acceleration cycle is repeated only after several seconds owing to the high power involved in charging and discharging the stored energy of the magnet. The Brookhaven Cosmotron magnet weighs over 2,000 tons, the Berkeley Bevatron 10,000 tons, and the Russian machine 35,000 tons.

3.2 Alternating-gradient Magnetic Accelerators

3.21 Alternating-gradient Synchrotrons, Strong-focusing. Further scaling up of the "conventional" proton synchrotron becomes impractical because energy scales as radius while magnet weight scales as the radius cubed, although operating experience permits some economies by reducing aperture. The alternating-gradient, or strong-focusing, synchrotron was invented to make use of a small vacuum chamber in a magnet of small cross section but large radius.[39–42]

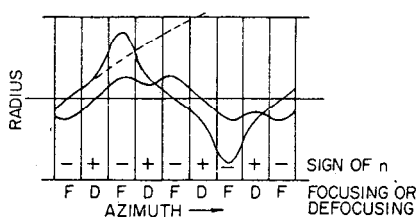

FIG. 13. Typical particle orbits in alternating-gradient field. Dotted line indicates beginning of similar orbit in constant-gradient field.

The magnetic accelerators previously described are stable only if the field index n lies between 0 and 1. If $n \gg 1$, there are strong vertical restoring forces, but there is also radial instability or defocusing and the inverse for $n \ll 0$. However, these restrictions are imposed by the requirement that the field and its gradient be azimuthally uniform—a requirement that is not fundamental. Suppose a series of magnets of high-n value (large radial gradient) set up with positive and negative gradients alternating. Orbits of typical disturbed particles (and all particles in an accelerator are disturbed from the central orbit to some degree) are shown in Fig. 13 with the radial dimension expanded for clarity. A view of the vertical oscillations would appear the same if the plus and minus labels on n were inverted. The oscillations are no longer sinusoidal but are increased in frequency and decreased in amplitude as compared to the low-n case. The beginning of a low-n oscillation is dotted in Fig. 13. An alternating-gradient synchrotron has N magnet periods, and each period contains a focusing and defocusing field (or a plus and a minus). The betatron oscillation phase shift per period μ must be in a stable region and is selected near $\pi/4$ for large machines. The number of betatron oscillations per revolution ν is $\nu = N\mu/2\pi$. The n value of the fields is approximately μ^2N^2/π^2 or $N^2/16$ for $\mu = \pi/4$. Another important attribute is the small radial displacement of the equilibrium orbit

with particle energy change. This "momentum compaction" is roughly 50 times improvement over the low-n machine and is as important as the amplitude reduction in betatron oscillations for reduction of aperture. Phase stability in the alternating-gradient synchrotron begins on the rising side of the r-f gap voltage, as in the linac, but at a transition energy $T_t \simeq (\nu - 1)E_0$ there is instantaneously no phase stability, and above this the phase stability is on the falling slope of the radio frequency, as in the low-n machine. Precision r-f control circuits will carry the beam through the phase transition by shifting the r-f phase at the proper time. Alternating-gradient proton synchrotrons are being built at CERN (Switzerland) and Brookhaven National Laboratory. The Brookhaven alternating-gradient synchrotron will have an energy of 25 to 30 Bev, diameter 840 ft, $N = 60$, $\nu = 8\frac{3}{4}$, magnet of cross section 33 by 39 in., and vacuum-chamber aperture about 3 by 6 in. Electron accelerators using strong focusing are quite compact. One at Cornell University gives 1 Bev, and larger ones are limited only by radiation loss.

3.22 FFAG—Fixed-field alternating-gradient accelerators apply the alternating-gradient principle to d-c magnetic fields.[43–44] The increase in duty cycle over the pulsed accelerators makes it possible to obtain large increases in beam current. The Thomas cyclotron, a precursor of the FFAG, uses a scalloped pole to compensate for relativistic effects and can be built for steady output at high energies.

The Midwestern Universities Research Association is intensively developing the FFAG.[44] Because of momentum compaction the orbits of particles over a large range of energy can be contained in a d-c ring magnet. At the same time radial and vertical stability can be maintained, and the particles accelerated by either radio frequency or a betatron flux core. In the "Mark I" type, the field increases with increasing radius in all sectors but the field is reversed in alternate sectors so the gradient alternates. Particles injected near the inner periphery will follow scalloped orbits which expand as the particles are accelerated. The Mark I has a large circumference factor due to the field reversals. A spiral-ridge (or Mark V) type has circumference vs. energy comparable to more conventional machines and produces alternating gradients because the field is rising as a particle approaches a ridge and is falling after the particle passes the ridge.

The FFAG basic principles are applicable to betatrons, cyclotrons, and synchrotrons. Although only one small working model is extant (1956), the FFAG provides another large extension of accelerator design.

It is evident that particles can be accelerated in a great many different configurations of electromagnetic fields. As the demand arises, more new types will no doubt be invented.

REFERENCES

These references are selected for descriptive content and lists of additional references. Much of the detailed information on accelerators is found only in privately circulated reports, some of which are in AEC Depository Libraries. Detailed constructional data are obtainable only by paying an extended visit to a laboratory where accelerator building is practiced.

Four extensive bibliographies list the accelerator literature through June, 1954. These also contain lists of accelerator installations.

Brookhaven National Laboratory Report BNL-L-101.

University of California Radiation Laboratory Reports UCRL-1238, UCRL-1951, UCRL-2672.

General

1. Livingston, M. S.: "High Energy Accelerators," Interscience Publishers, Inc., New York, 1954.
2. Sturrock, P. A.: "Static and Dynamic Electron Optics," Cambridge University Press, London, 1955.

Direct-voltage Accelerators

3. Buechner, W. W., *et al.*: Electrostatic Accelerator for Electrons, *Rev. Sci. Instr.*, **18**: 754 (1947).

4. Cockcroft, J. D., and E. T. S. Walton: Experiments with High Velocity Positive Ions, *Proc. Roy. Soc.* (*London*), **A136**: 619 (1932).
5. Elkind, M. M.: Ion Optics in a High Voltage Accelerating Tube, *Rev. Sci. Instr.* **24**: 129 (1953).
6. Heilpern, W.: Cascade Generator for Acceleration of Particles to 4 Mev, *Helv. Phys. Acta*, **28**: 485 (1955).
7. Peck, R. A., and H. P. Eubank: High-current Cockcroft-Walton Accelerator for Neutron Production, *Rev. Sci. Instr.*, **26**: 444 (1955).
8. Turner, C. M., and E. J. Rogers: Van de Graaff Accelerator, *Rev. Sci. Instr.*, **24**: 805 (1953).
9. Tuve, M. A., L. R. Hafstad, and O. Dahl: High Voltage Technique for Nuclear Physics Studies, *Phys. Rev.*, **48**: 315 (1935).

Linear Accelerators

10. Linear Accelerator Issue, *Rev. Sci. Instr.*, vol. 26, February, 1955. (Describes both proton and electron types.)
11. Lawrence, E. O.: High-current Accelerators, *Science*, **122**: 1127 (1955).
12. Slater, J. C.: Design of Linear Accelerators, *Revs. Mod. Phys.*, **20**: 473 (1948).
13. Sloan, D. H., and E. O. Lawrence: The Production of Heavy High Speed Ions, *Phys. Rev.*, **38**: 2021 (1931).

Cyclotron

14. Cohen, B. L.: Theory of the Fixed Frequency Cyclotron, *Rev. Sci. Instr.*, **24**: 589 (1953).
15. Lawrence, E. O., and M. S. Livingston: The Production of High Speed Ions without Use of High Voltages, *Phys. Rev.*, **40**: 19 (1932), **45**: 608 (1934).
16. Livingston, M. S.: The Cyclotron, *J. Appl. Phys.*, **15**: 2, 128 (1944).
17. Livingston, R. S.: Acceleration of Partially Stripped Ions, *Nature*, **173**: 54 (1954), **170**: 221 (1952).
18. Nahmias, M. E.: "Le cyclotron" and "Machines atomiques," editions of *Rev. opt.*, Paris, 1945.

Betatron

19. Foote, R. S., and Ben Petree: A Pulsed Magnetic Extractor for a Betatron, *Rev. Sci. Instr.*, **25**: 694 (1954).
20. Kerst, D. W.: Acceleration of Electrons by Magnetic Induction, *Phys. Rev.*, **60**: 47 (1941); with R. Serber, Electronic Orbits in the Induction Accelerator, *Phys. Rev.*, **60**: 53 (1941); A 20-Mev Betatron, *Rev. Sci. Instr.*, **13**: 387 (1942).
21. Schwinger, J.: Classical Radiation of Accelerated Electrons, *Phys. Rev.*, **75**: 1912 (1949).
22. Westendorp, W. F., and E. E. Charlton: 100 Mev Induction Electron Accelerator, *J. Appl. Phys.*, **16**: 581 (1945).

Microtron

23. Kaiser, H. F., and W. T. Mayes: General Purpose X-band Laboratory Microtron, *Rev. Sci. Instr.*, **26**: 565 (1955).
24. Redhead, P. A., H. Le Caine, and W. J. Henderson: The Electron Cyclotron, *Can. J. Research*, **A28**: 73 (1950); *Nucleonics*, **5**(4): 60 (1949).

Synchrocyclotron

25. Anderson, H. L., *et al.*: Synchrocyclotron for 450-Mev Protons, *Rev. Sci. Instr.*, **23**: 707 (1952).
26. Bohm, D., and L. L. Foldy: Theory of the Synchrocyclotron, *Phys. Rev.*, **72**: 649 (1947).
27. Le Couteur, E. J., A. V. Crewe, and J. W. G. Gregory: Extraction of the Beam from the Liverpool Synchrocyclotron, *Proc. Roy. Soc.* (*London*), **A232**: 236, 242 (1955).
28. Henrich, L. R., D. C. Sewell, and J. Vale: Operation of the 184-in. Cyclotron, *Rev. Sci. Instr.*, **20**: 887 (1949).
29. Richardson, J. R., *et al.*: Development of the FM Cyclotron, *Phys. Rev.*, **73**: 424 (1948).

Electron Synchrotron

30. Elder, F. R., *et al.*: A 70-Mev Synchrotron, *J. Appl. Phys.*, **18**: 810 (1947); also Radiation from Electrons in a Synchrotron, *Phys. Rev.*, **74**: 52 (1948).
31. Frank, N. H.: Stability of Electron Orbits in the Synchrotron, *Phys. Rev.*, **70**: 177 (1946).
32. Lawson, J. L., *et al.*: 300 Mev Nonferromagnetic Electron Synchrotron, *Rev. Sci. Instr.*, **26**: 809 (1955).
33. Thomas, J. E., W. L. Kraushaar, and I. Halpern: Synchrotrons, *Ann. Rev. Nuclear Sci.*, **1**: 175 (1952).

Proton Synchrotron

34. Cosmotron Staff: Cosmotron Issue, *Rev. Sci. Instr.*, **24**, September, 1953. (The most complete description of an accelerator in the accessible literature.)
35. Blackman, N. M., and E. D. Courant: Dynamics of a Synchrotron with Straight Sections, *Rev. Sci. Instr.*, **20**: 596 (1949); also Scattering of Particles by Gas in a Synchrotron, *Phys. Rev.*, **75**: 315 (1949); *Rev. Sci. Instr.*, **24**: 836 (1953).
36. Blewett, J. P.: Recent Developments in Proton Synchrotrons, *Ann. Rev. Nuclear Sci.*, **4**: 1 (1954).
37. Hibbard, L. V.: The Birmingham Proton Synchrotron, *Nucleonics*, **7**(4): 30 (1950); See also *Nature*, **172**: 704 (1953).
38. Twiss, R. Q., and N. H. Frank: Orbital Stability in a Proton Synchrotron, *Rev. Sci. Instr.*, **20**: 1 (1949).

Alternating-gradient Types

39. Adams, J. B., M. G. N. Hine, and J. D. Lawson: Effect of Magnet Inhomogeneities in the Strong Focusing Synchrotron, *Nature*, **171**: 926 (1953).
40. Adams, J. B.: The Alternating Gradient Proton Synchrotron; also G. Luders: Theory of Particle Orbits in the AG Synchrotron, Supplement to vol. II, ser. X, *Nuovo cimento*, No. 1, 1955.
41. Blewett, J. P.: Radial Focusing in the Linear Accelerator, *Phys. Rev.*, **88**: 1197 (1952).
42. Courant, E. D., M. S. Livingston, and H. S. Snyder: The Strong-focusing Synchrotron, *Phys. Rev.*, **88**: 1190 (1952).
43. Thomas, L. H.: Paths of Ions in the Cyclotron, *Phys. Rev.*, **54**: 580 (1938). See also Ref. 11.
44. Symon, K. R., *et al.*: Fixed Field Alternating Gradient Accelerators, *Phys. Rev.*, **98**: 1152 (1955). (Abstracts only.)

Ion Sources

45. Gow, J. D., and J. S. Foster: A High Intensity Pulsed Ion Source, *Rev. Sci. Instr.*, **24**: 606 (1953).
46. Livingston, R. S., and R. J. Jones: High Intensity Ion Source for Cyclotrons, *Rev. Sci. Instr.*, **25**: 552 (1954).
47. Moak, C. D., H. Reese, and W. M. Good: Radio Frequency Ion Source for Particle Accelerators, *Nucleonics*, **9**(3): 18 (1951).

5-5 ENGINEERING TESTING IN REACTORS

BY

John R. Huffman and F. L. McMillan

Reactors, being very large sources of neutrons and γ rays, in many cases of high intensities, are used for studies of the effect of these particles on matter and of the effects of matter on these particles. There is no other major source of neutrons.*

Many studies of fundamental importance to reactor engineering are carried out in reactors, such as properties of particles and attenuation of neutrons and γ rays in matter. This type of experiment is discussed in Sec. 5-2 of the handbook. In designing and constructing reactors, the nuclear engineer may be forced to proceed without the data and experience obtained from pilot-plant or semiworks experimentation. These are generally too costly and too close in size to the ultimate reactor to warrant their use. To establish feasibility, he is forced to resort to testing and confirming his design by conducting experiments in an operating reactor. While these tests are costly, they are orders of magnitude cheaper than the construction and test of the reactor.

Engineering tests are more concerned with changes in mechanical and physical properties, dimensional stability, and corrosion of materials. Such experiments are usually performed on components of a new design. They may consist of testing small samples, segments, dynamically similar models or full-scale models, of fuel-bearing, moderating, or structural materials.

1 STATIC TESTS

1.1 Before and After Measurements

1.11 Tests at Ambient Temperature. Component testing can take several paths. Depending on the reactor used and hence the restrictions placed on the experiments, valuable information can be obtained by testing under the environment of the reactor. For an air-cooled test reactor, air cooling can be used; for a low-temperature water-cooled test reactor, water cooling can be used—in both instances up to temperatures, heat-transfer and hydraulic conditions imposed by the reactor.

The simplest type of test is to insert a small specimen directly in the test reactor. Generally it is preferred to encapsulate the specimen in the material of construction of the reactor to avoid problems in the reactor and to divorce the specimen from the coolant used in the reactor.

The properties of material under test are determined before and after irradiation. Many specimens can be incorporated in a single capsule, or a series of capsules can be installed in a single test hole. If the environment (temperature, pressure, coolant, etc.) is not important, full-sized fuel assemblies of new design can be substituted for those of the test reactor.

An important type of test facility is the shuttle. Specimens up to 10 to 100 g can be sent into a reactor by pneumatic, mechanical, or hydraulic forces. In large reactors an endless chain or train can be used to carry large numbers of specimens through the reactor. For short-time irradiations, pneumatic systems are provided.

* Accelerators do produce higher neutron intensities than are available in reactors, although over a smaller volume.

In water-cooled reactors, hydraulic devices are available. The advantage of these systems is that a large number of irradiations can be performed independent of reactor operation. Most other types of tests require the reactor to be shut down when experiments are inserted.

Mechanical systems are generally slow moving and are best suited for relatively long-time irradiations. Hydraulic systems are perhaps next and are used for irradiations lasting 5 min to several days or weeks. Pneumatic systems, which handle the smallest quantities, are excellent for irradiations required to last from less than a second to several minutes. They can also be built to deliver samples rapidly to the chemistry or physics laboratory remote from the reactor. Depending on the half-life of the material being studied, these shuttle systems each have their place. They are a great convenience to the staff operating a test reactor.

1.12 Tests at Elevated Temperatures and Pressure. To establish a static environment different from that of the test reactor, specimens can be inserted in capsules containing the desired coolant fluid or some other fluid for heat transfer. Often, to fit the temperature conditions of the test reactor and at the same time provide higher temperatures in the test specimen, heat sources and thermal insulation are designed into the capsule.

When more exact knowledge of test conditions is desired, leads are brought out from the capsule so that temperature and pressure conditions can be recorded. Hence, to some extent controlled conditions for the experiment can be maintained and safety conditions for the reactor can be satisfied.

1.13 Converters. To provide a flux of fast neutrons, sleeves of fissionable material can be designed into a container and the specimen placed inside this sleeve.

1.2 Static Systems—In-pile Measurement

An important type of experiment is one attempting to measure the properties of materials *in situ* in a reactor. This is intended to determine whether mechanical properties are the same during neutron bombardment as they are after bombardment. In such instances remotely controlled load-applying equipment and remotely controlled recording-measurement instruments must be part of the experiment. Examples of this type of experiment involve measurements of tensile strength and creep. One problem involved is to establish the effects of irradiation on the load-applying equipment and the detection instruments themselves.

2 DYNAMIC TESTS

2.1 Cycling Systems

Static irradiations serve to test various fuel elements or materials under conditions of full or level reactor operation. Some interest may be expressed on the effect of reactor startup or shutdown on the stability of proposed fuel assemblies. Testing fuel under these conditions is somewhat more complicated than static burnup and stability tests. Test reactors and production reactors which provide experimental facilities must operate at constant full power during most of the operating cycle. The experiment itself must then be cycled into and out of the reactor flux zone on some prearranged schedule. In order not to affect neighboring experiments or the stability of the reactor itself, such experiments must be compensated. Compensation results in no change in reactivity as the experiment is cycled into and out of the flux zone. Temperature monitors in the form of thermocouples may be used to record the number of cycles experienced by the sample as well as the temperature excursions.

Another possible method, such as a poison sleeve, could be used to shade the test assembly, but this method is much more difficult to compensate. Two similar test sections, one of which replaces the other as the experiment cycles to and fro, is by far the simpler method to use.

The principal objection to tests outlined above lies in the fact that test operating conditions do not necessarily duplicate the desired operating conditions of the test specimen.

2.2 Loops

The developing interest in power generation by nuclear power has produced a demand for test facilities more nearly duplicating proposed reactor operating conditions. To satisfy the demand for testing operation under conditions of high temperature and pressure in those reactors using a primary water loop, high-pressure loops have been developed. Questions of fuel stability, heat transfer, water chemistry, radiation-accelerated corrosion, fission-product leakage, and fuel stability under desired operating conditions may be answered in high-pressure water loops.

Basically, a high-pressure water loop consists of an in-pile test assembly which carries the test element, a thermally controlled pressuring surge tank, and some method of circulating the water. Heaters may be provided in the line to maintain loop operating conditions. Flow can be controlled by means of automatic flow-control valves or variable-frequency power supply to pump motors. Auxiliary systems such as water make-up, water purification, sampling, gas injection, and radiation monitoring may be necessary to maintain such an experiment. Figure 1 illustrates a flow sheet for a typical high-pressure, high-temperature water loop. An external test facility may be provided in order to obtain comparisons between effects under identical operating conditions with the exception of irradiation.

The system is pressurized by means of a heated surge tank, the temperature of the water in the surge tank being maintained at the saturation temperature corresponding to the desired loop operating pressure. The connection between the loop and the surge tank is small enough that pressure alone is transmitted and no appreciable heat is transferred from the surge tank to the primary system. Circulation is maintained by means of the circulating pumps, two pumps being provided to ensure circulation in the event of failure of a pump. The control circuitry should be such that automatic take-over by the standby pump results from primary pump failure. The heat exchanger is provided to remove heat from the recirculating water in the loop. This heat removal is compensated for by the line heaters and the heat generation in the fuel section under irradiation. Conditions of inlet and outlet temperature to the sample may be closely maintained in this fashion. In case of trouble in the loop, the heat exchanger also serves as a thermal sink for cooling the circulating water and thus reducing the pressure on the loop.

The radiation monitor maintains close supervision on the activity of the loop water, indicating possible fission breaks or the build-up of corrosion products being carried by the water. A water-purification system, consisting of a side stream from the primary loop, continuously maintains the desired water chemistry. Ion-exchange resins maintain the desired pH and conductivity and remove corrosion products and possibly fission products.

An auxiliary power supply is furnished in order to provide pump power and supervisory circuit power in the event of plant power failure.

Many of the experiment controls must, of necessity, be connected to the reactor safety circuits in order to provide protection for the reactor and experiment in case hazardous conditions develop during operation. Automatic control is provided for such important factors as surge tank liquid level, flow, pressure drop in test section, loop pressure, water temperature, surge tank pressure, surge tank temperature, and water activity. The more important parameters, those likely to result in the development of hazardous conditions, are connected to the reactor control circuit and may initiate automatic reactor power reductions at a rate consistent with the hazard. These may range from an immediate scram to much slower rates of power reduction.

Figure 2 shows the flow sheets of a make-up system and a pump cooling system which might be used with such an experiment.

Experimental loops, in which high levels of activity are anticipated, are provided with auxiliary circulating systems to be used to provide cooling for the in-pile assembly

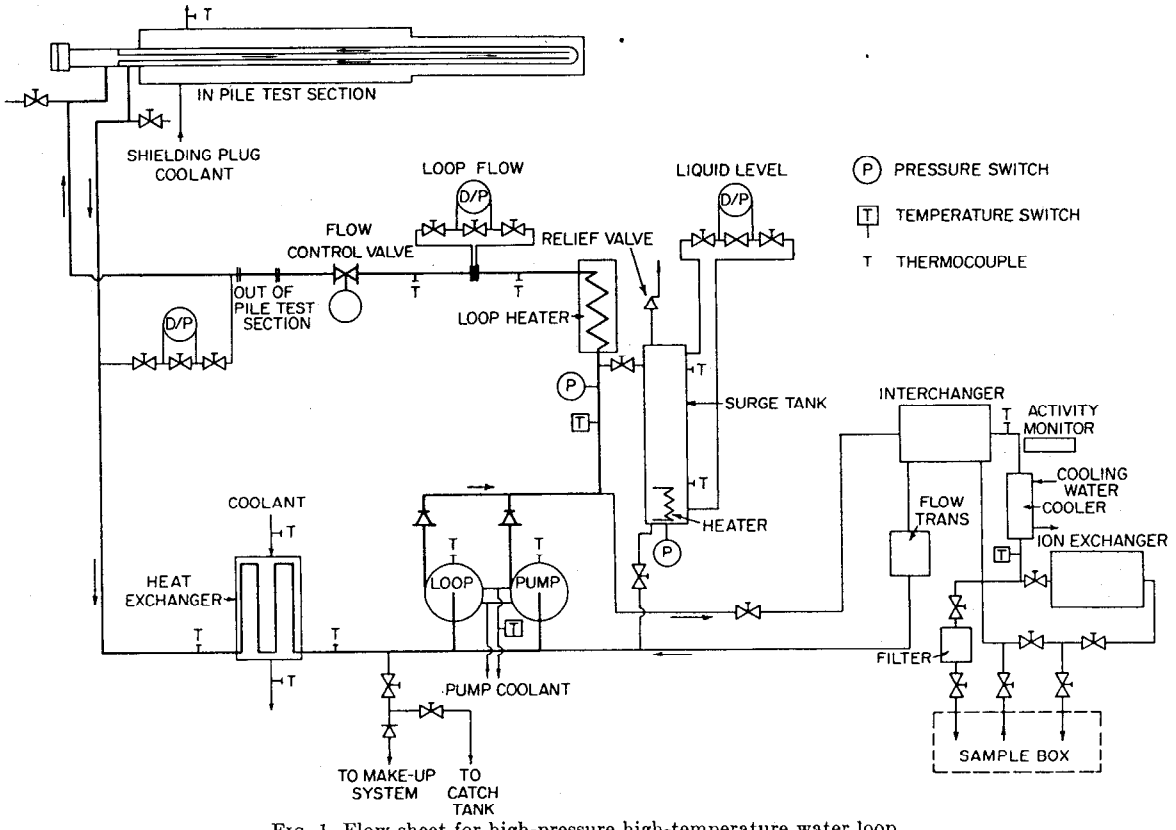

FIG. 1. Flow sheet for high-pressure high-temperature water loop.

during periods in which the main loop is being decontaminated. In general, these loops operate at lower temperature and pressure than the primary loop and are used when excessive activity develops or mechanical failure occurs in the primary loop.

The purification system receives a small side-stream flow from the loop. The water passes through filters and ion exchangers to remove both solid and ionic particles. Sample taps are usually provided.

The decontamination system is designed to receive and process the loop contents after shutdown. Contaminated water is received by catch tanks and either stored or pumped to hot-waste storage facilities.

The make-up system processes demineralized water for addition to the loop.

Figure 3 shows in block diagram the type of control system which might be used on a loop of this sort. Troubles such as low flow or low differential pressure across the in-pile tube, which could result in serious consequences, automatically scram the

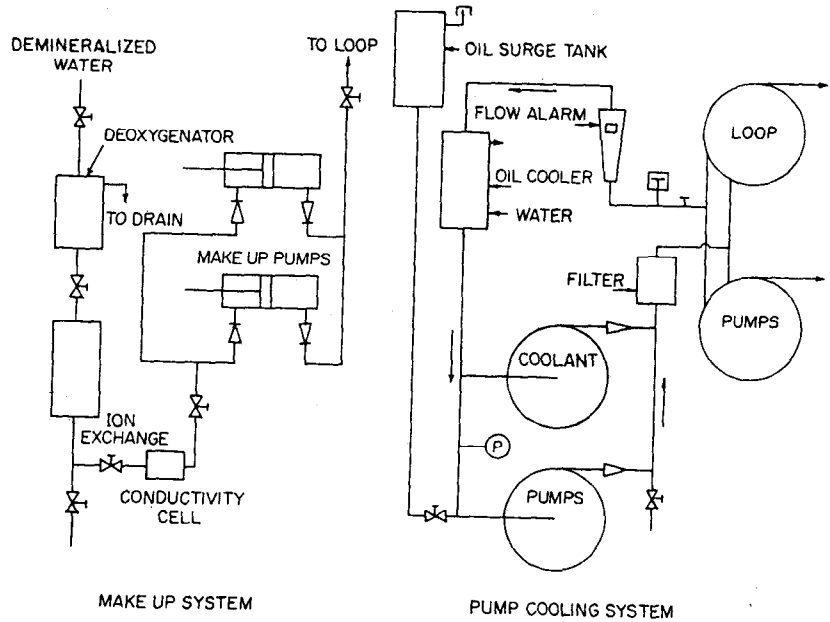

FIG. 2. Flow sheets of make-up system and pump cooling system.

reactor. Other troubles of less serious nature will call for reduction of power at a slower rate. When conditions requiring the attention of the operator develop, annunciators provide warning signals to this effect. Some difficulties are automatically corrected by means of the experiment control circuits. Instrument trouble can result in erroneous calls for power reduction, and some means should be provided to release the reactor from these false calls for power reduction. A switch or test block arrangement is provided to disconnect from the reactor controls all experiment automatic power-reduction circuits except those which cannot be handled manually, because of short time factor, by an operator in continuous attendance at the experiment.

Loop tests have been performed in MTR, at Hanford, Chalk River, and Oak Ridge.

Considerable care beforehand should be given to methods of inserting involved experiments into a reactor, removing them after irradiation, shipping them when they are quite radioactive, and examining them by remote-control means. Insertion in a reactor generally requires shielding around insertion points. Upon removal much

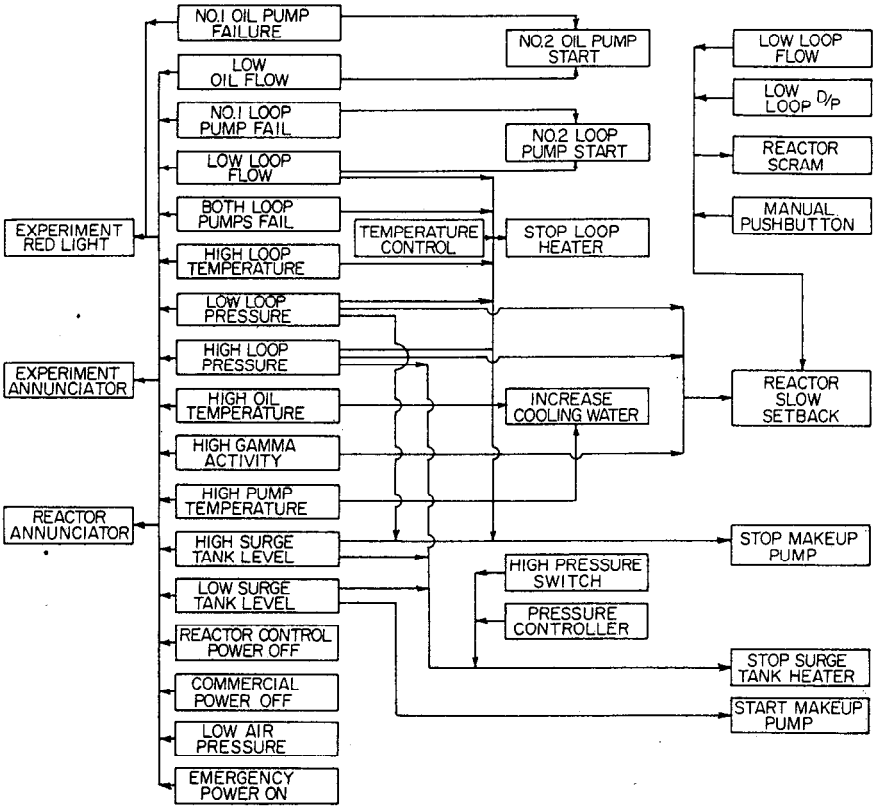

FIG. 3. Block diagram of control system on loop.

more elaborate shielding is required, both around the reactor and around the experimental equipment. The equipment must be transported to a storage place or a shielded inspection place in heavy lead containers. Hot cells with remote handling devices are required to disassemble the equipment. Containers with Bureau of Explosives approval are required for shipment. Fully equipped hot cells are required to examine and test the specimens.